## 步进电机尺寸图：
STEP MOTOR DIMENSIONS

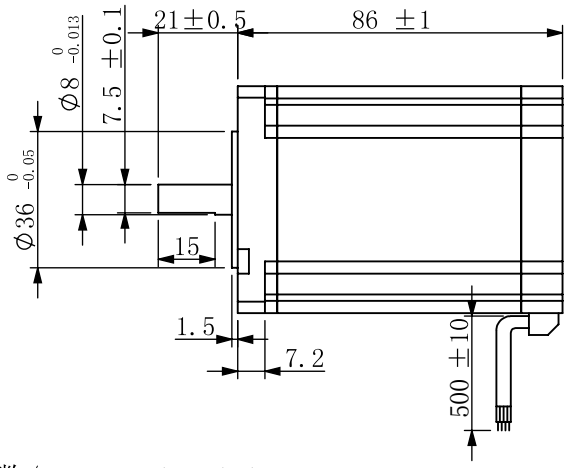


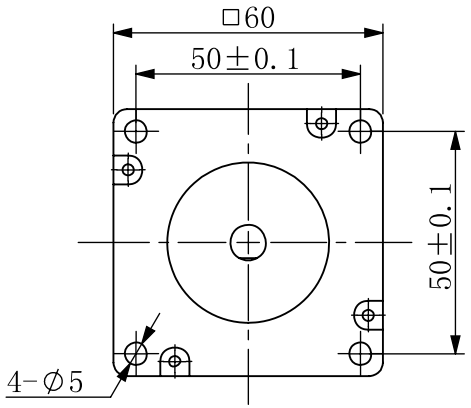


## 电机特性参数/ELECTRICAL PARAMETER

| | |
|---|---|
| 步 距 角/STEP ANGLE | 1.8° ±5% |
| 相 数/NO. OF PHASES | 2 |
| 额定电压/RATED VOLTAGE | 2.5V |
| 额定电流/RATED CURRENT | 5.0A |
| 电 阻/RESISTANCE | 0.5ohm±10% AT25℃ |
| 电 感/INDUCTANCE | 2.22mH±20% AT 1kHz，1Vrms |
| 保持力矩/HOLDING TORQUE | 3.0N.m |
| 运行力矩/(AT —PPS)<br>RUNNING TORQUE(AT —PPS) | ——以上/MIN<br>(——V.DC，——A/相(PHASE)，——相励磁/EX) |
| 绝缘耐压/DIELECTRIC STRENTH | 500V A.C 1分钟/MINUTE |
| 绝缘电阻/INSULATION RESISTANCE | 100MΩ以上/MIN. |
| 绝缘等级/INSULATION CLASS | CLASS B |
| 温度上升/TEMPERATURE RISE | 80K MAX. |
| 转子惯量/ROTOR INERTIA | 690g.cm² |
| 重 量/WEIGHT | 约/APPROX. 1394克/g |
| 允许轴向负载/ALLOWABLE THRUST LOAD | 5N |
| 允许径向负载/ALLOWABLE RADIAL LOAD | 30N(轴端/ON THE SHAFT END) |
| 运行环境温度/OPERATION AMBIENT TEMP. | -20℃——+50℃ |
| 运行环境湿度/OPERATION AMBIENT HUM. | 15%——90% |
| 寿 命/LIFE | 5000小时/HOURS |

备注/NOTE)：
1.额定电流，两相同时通电/AT RATED CURRENT,TWO PHASES ON.
2.热阻法：电机安装在84*84*T5的铝板上，电机线圈两端通额定电压，0PPS /MEASURED BY RESISTANCE METHOD. MOUNT WITH ALUMINUM HEAT SINK 84*84*T5 AT TWO WINDING BE EXCITED BY RATED VOLTAGE,0PPS,2PHASE ON.
3.寿命测试条件：整步，运行速度为500PPS，轴承的表面温度不超过70° C
LIFE TEST CONDITION:2PHASE EXCITING,FULL STEP,AT 500PPS. STARTING PULSE, BEARING TEMPERATURE SHOULD BE 70° C MAX.

### 励磁顺序(2相励磁)VS.旋转方向
EXCITING SEQUENCE(TWO PHESES) VS. DIRECTION OF ROTATION

CW ↓

| STEP | A+ | B+ | A- | B- |
|---|---|---|---|---|
| 1 | + | + | - | - |
| 2 | - | + | + | - |
| 3 | - | - | + | + |
| 4 | + | - | - | + |

↑ CCW

从安装面看为顺时针方向
CLOCKWISE VIEW FROM MOUTING SIDE

### 接线图/WIRING DIAGRAM

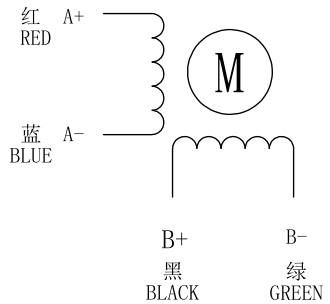


| | | | | | | | | |
|---|---|---|---|---|---|---|---|---|
| CONFIRMED&ACCEPTED BY CUTOMER (客户确认&接受) | | | | | | | | |
| COMPANY CHOP&SIGNATURE (盖章&签名) | | | | | | | | |
| 一般公差 TULERANCE ±0.3/±3° | 版本 REV. | 年 月 日 DATE | 变更番号 ECR NO. | 变 更 内 容 REVISIONS | 设计 BY | 备注 NOTE | REV. | A |

| | | | | | |
|---|---|---|---|---|---|
| 设计/DESIGNED | | 比例 SCALE | | 型 号/MODEL 60D86 | 三维图 THIRD ANGLE PROJECTION |
| 审核/CHECKED | | 单位 UNIT | mm | | |
| | | 骁鸣智能科技（广州）有限公司 | | 页 SHEET | 1/1 |